BODY, DASH, UPPER - Z26SPD92AN/AH/BN/BH (C750837)

2026 RZR - RZR PRO S ULTIMATE (R01) - Z26SPD92AN/AH/BN/BH

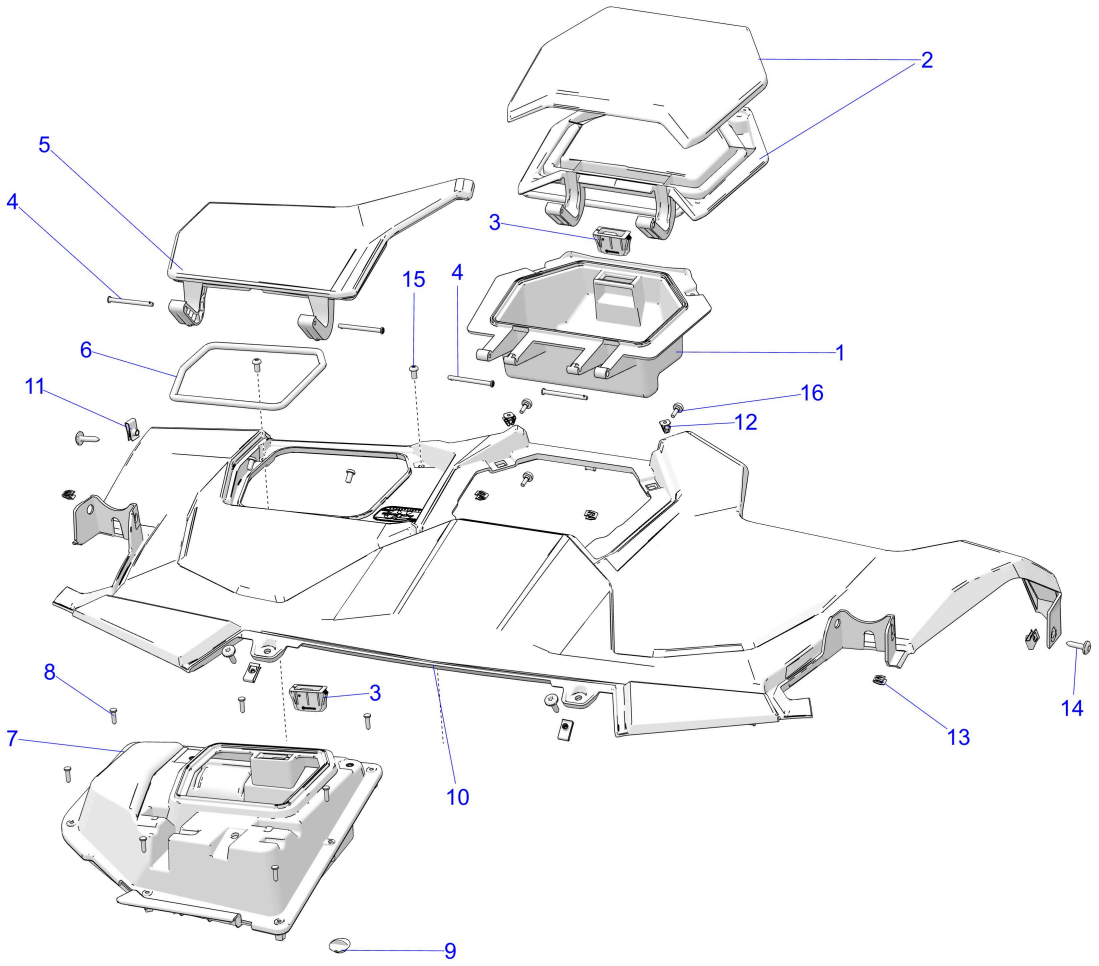

© 2025 Polaris Industries Inc. C750837

Reference #	*Part#*	*Description*	*Quantity*
1	5465349-070	STORAGE-DASH,FRT,CNTR,USB,BLK	1
2	2639340	ASM-DASH,LID,CENTER	1
3	7083108	ASM-LATCH,DASH BOX,10LB [FROM 9/12/2025]	1
3	7083182	ASM-LATCH,DASH BOX,10LB,M [TO 9/12/2025]	1
4	7663071	PIN-COTTER,3/16	4
5	2639686	ASM-DASH,LID,PASSENGER,MFG [TO 7/5/2025]	1
5	2640646	ASM-DASH,LID,PASSENGER,MFG [FROM 7/5/2025]	1
6	5418490	SEAL-LID,STORAGE,RH	1
7	2640358	ASM-DASH,STORAGE,PASS,SHORT	1
8	7518227	SCR-#8X3/4-HI/LO-PN-T20TRX-ZTB	7
9	5418084	PLUG-COMPARTMENT	1
10	5459968-070	PANEL-DASH,UPPER,BLK	1
11	7081305	CLIP-U SPEED NUT	2
12	7547324	NUT, PAL NUT, M4	2
13	5456313	CLIP-TRIM, PLASTIC, WHITE	11
14	7519650	SCR-TXTH-M6X1.0X25 ZFB	4
15	7519063	SCREW-TXBH-M6X1.0X12 8.8 ZPB D20	4
16	7518518	SCREW-M4.2X1.40,12,HEX,BUTT,SHLD	2

Copyright 1996-2026 Polaris Industries U.S.A All rights reserved.